GET IN TOUCH

EUROPE

FRANCE

Gérard Malugani (ext)

gmalugani54@gmail.com

+33 6 08 22 29 03

GERMANY

Dr. Olivier Brasseur

olivier.brasseur@b3-energy.de

+49-176-70257686

ITALY

Francesco Borghetti (ext)

info@francescoborghetti.com

+39 331 1843713

POLAND

Emil Milosiewicz (ext)

emil.milosiewicz@thermotechpolska.pl

+48 792 744875

SPAIN

Meritxell Vila (ext)

mvila@meryt-chemical.com

+34 670 51 84 38

NORTH AMERICA

USA

Anthony Hawkins (ext)

anthony.hawkins@bdheat.com

+1 (813) 541-5526

SOUTH EAST ASIA

INDONESIA

Michael Darmowijoto (ext)

michael.darmowijoto@rekuvindo.com

+62 811 99 1018

REST OF WORLD

Dr. Olivier Brasseur

olivier.brasseur@b3-energy.de

+49-176-70257686

B3 energy solutions

B3 energy solutions GmbH
Hüttenstraße 1
46284 Dorsten, Germany
info@b3-energy.de
www.b3-energy.de

Our German headquarter brings together a dedicated team of managers, engineers and workers.

B3 ENERGY SOLUTIONS

HEAT XCHANGERS FOR INDUSTRIAL HEAT RECOVERY SOLUTIONS

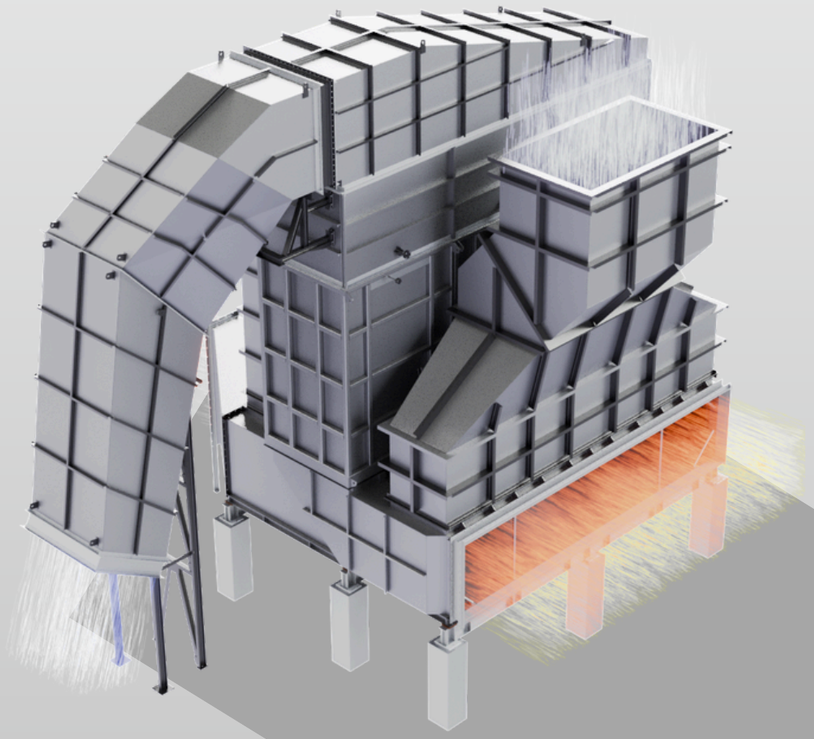

B3 energy solutions

COMPANY

B3 energy solutions is a founder-led company dedicated to energy efficiency. We produce plate-type heat exchangers to be used in heat recovery applications, such as preheater for furnaces or flue gas reheaters for catalyst-based air pollution control systems.

REFERENCES

We have been serving the petrochemical, chemical and waste-to-energy sector while extending our business activities to new customer industries. Together with our partners, we have delivered projects all around the globe.

SCOPE

While the manufacturing of heat exchangers and the delivery of turnkey solutions is the core of our business, our scope of services extends to preliminary studies, special engineering projects, replacement jobs on site and supervision services.

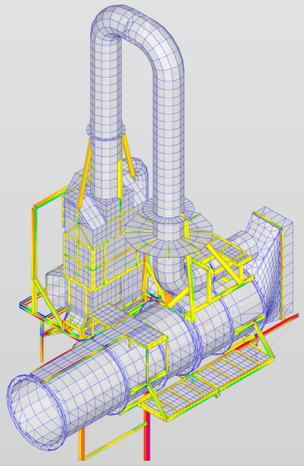

B3 energy solutions

COMBUSTION AIR PREHEATERS

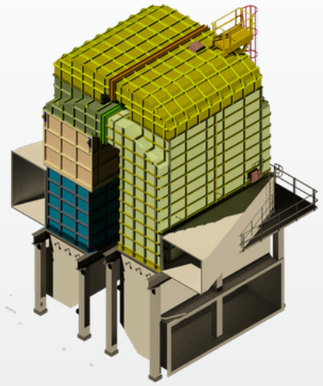

Our flagship plate-type heat exchangers come in multiple configurations including counter-flow, cross-flow or cross-counter flow combinations. A key characteristic of our design is a unique combination of high duty, compact dimensions and advanced corrosion protection.

FLUE GAS REHEATERS

For flue gas reheater projects, we bring the same versatility and experience to the table as with our combustion air pre-heaters. An additional advantage of our design lies in the compatibility with already installed counter flow plate-type heat exchangers, making module replacement an economically highly viable option.

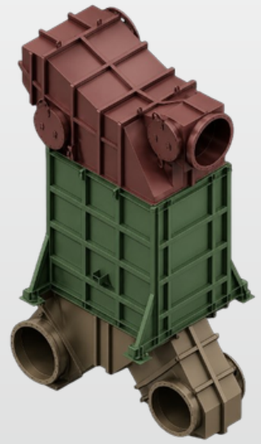

STEAM HEATERS

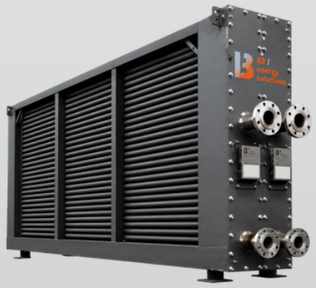

Whether cold air bypasses, hot air recirculation, ferrules or corrosion resistant material, we can suggest you the best approach to protect the cold end of your equipment. Should steam be available on site, our steam heat exchangers can be combined with other equipment or serve as a stand-alone solution to raise process gas temperatures.

25+ projects
executed within the last 5 years

30.000+ m²
of annually produced heat exchange surface

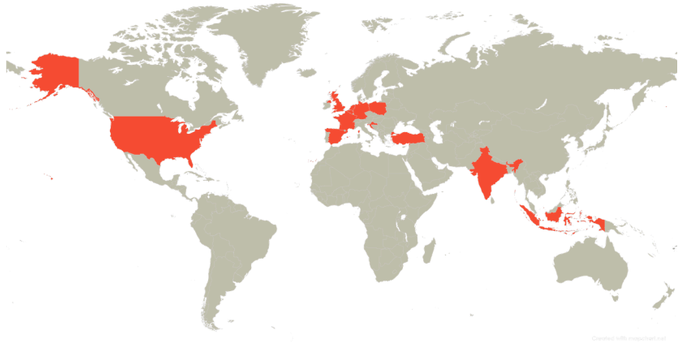

7+ local agents
to facilitate reaching out to us

5+ languages
spoken by our sales team